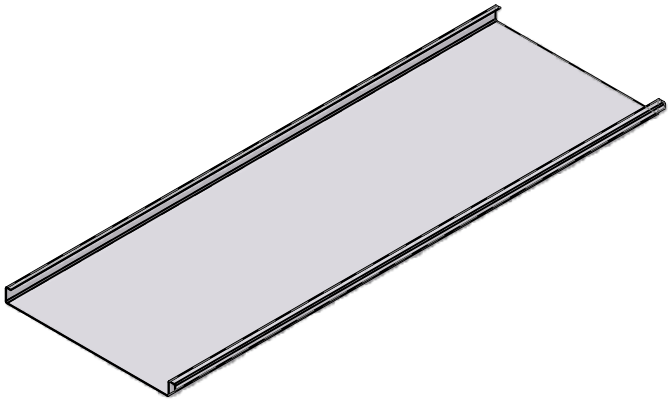

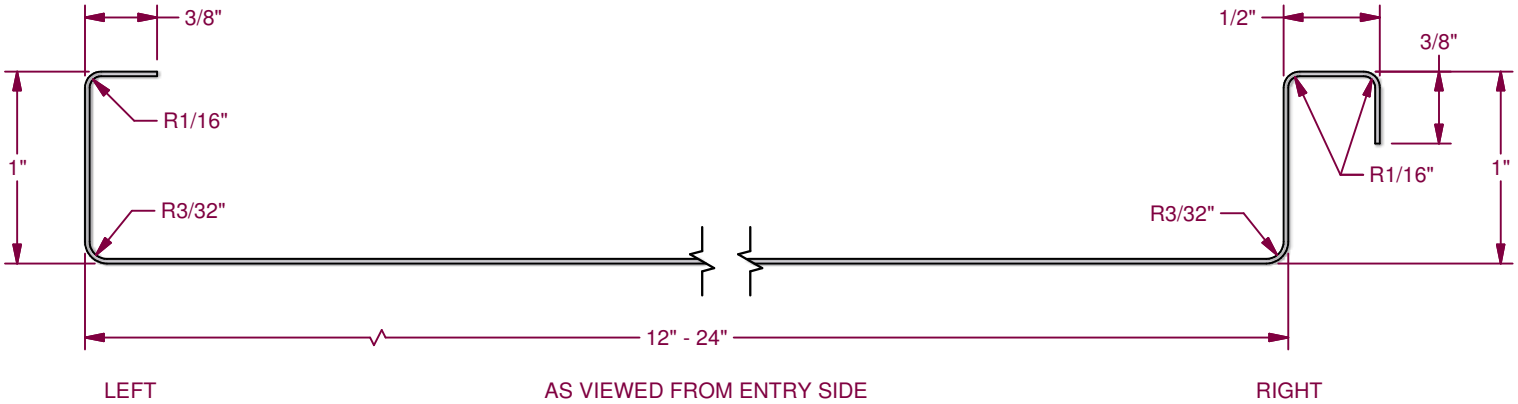

NOTE:
MATERIAL USAGE: APPROX. 3"

MATERIAL	FINISH

REVISION HISTORY

REV	ECR NO.	DATE	RELEASED BY
1	ADDED R DIM	07/01/09	JD

TOLERANCES
.XX = ± .01
.XXX = ± .005
FRACTION = ± 1/32"
ANGLE = ± 1/2°

DRAWN BY: JD
DATE: 04/24/08
CHECK BY: RS
DATE: 04/24/08

NEW TECH MACHINERY CORP.

PART NAME: SS100 PANEL PROFILE

PART NUMBER: SP1-100P

SHEET: 1 OF 1

REVISION: 1